PARTS LOCATION GRID

MAIN BOARD

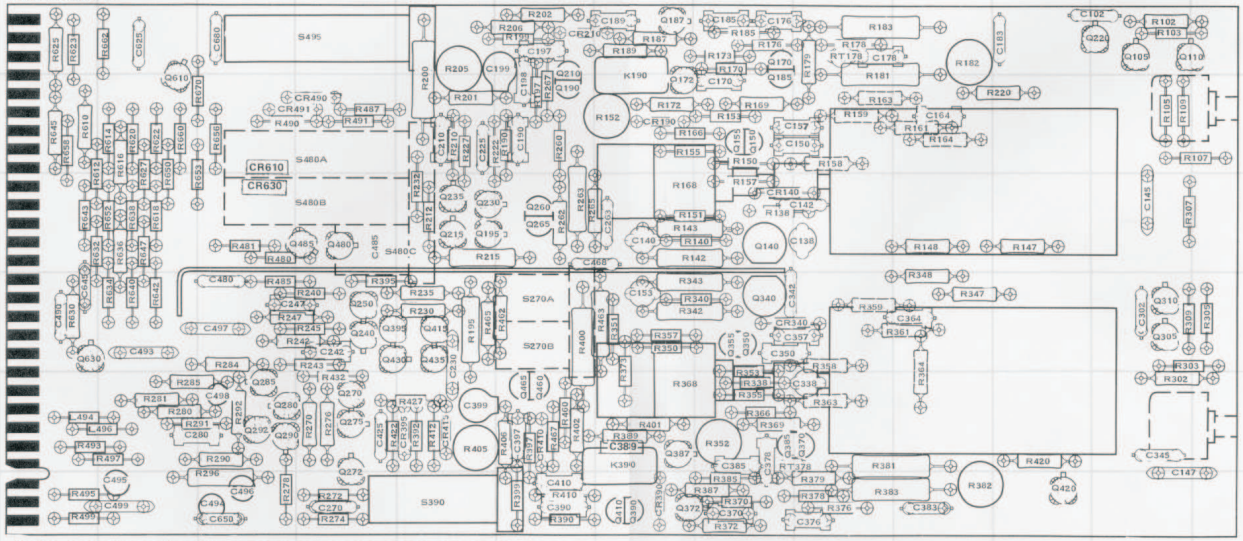

CH. 1

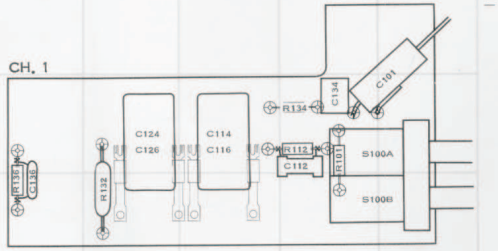

CH. 2

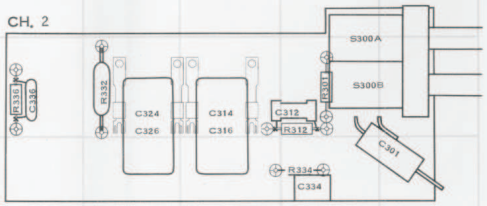

NOTE: COMPONENTS SHOWN WITH DASHED LINES ARE LOCATED ON BACK SIDE OF BOARD.

CKT NO	GRID LOC
C101	R2
C102	L1
C112	Q2
C114	P2
C116	P2
C124	O2
C126	O2
C134	Q2
C136	N3
C138	I3
C140	G3
C142	I3
C145	L3
C147	L6
C150	I2
C153	G4
C157	I2
C164	J2
C170	H2
C176	H1
C178	I1
C183	K1
C185	H1
C189	G1
C190	F2
C197	F1
C199	F1
C210	E2
C225	E2
C230	E4
C242	D4
C247	C4
C263	G3
C270	D6
C280	C5
C301	R6
C302	L4
C312	Q5
C314	P5
C316	P5
C324	O5
C326	O5
C334	Q6
C336	N5
C338	I5
C340	I4
C342	H4
C345	L5
C350	H4
C357	I4
C364	J4
C370	H6
C376	I6
C378	H5
C383	J6
C385	H5
C389	G5
C390	F6
C397	F5
C399	E5
C410	F6
C425	D5
C468	G3
C480	C4
C485	D3
C490	A4
C493	B4
C494	C6
C495	B6
C496	C6
C497	C4
C498	C5
C499	B6
C625	B1
C645	A4
C650	C6
C680	C1
CR140	H3
CR190	G2
CR210	F1
CR340	H4
CR390	G6
CR395	E5
CR410	F5
CR415	E5
CR490	D2
CR491	C2
CR610	C2
CR630	C3
K190	G2
K390	G5
L494	A5
L496	B5
L497	B5
Q105	L1
Q110	L1
Q140	H3
Q150	H2
Q155	H2
Q170	H1
Q172	G2
Q187	G1
Q190	F2
Q195	E3
Q210	F1
Q215	E3
Q220	L1
Q230	E3
Q235	E3
Q240	D4
Q250	D4
Q260	F3
Q265	F3
Q270	D5
Q272	D6
Q275	D5
Q280	C5
Q285	C5
Q290	C5
Q292	C5
Q305	L4
Q310	L4
Q340	H4
Q350	H4
Q355	H4
Q370	I5
Q372	G6
Q385	H5
Q387	G5
Q390	G6
Q395	D4
Q410	G6
Q415	E4
Q420	K6
Q430	D4
Q435	E4
Q460	F5
Q465	F5
Q480	D3
Q485	D3
Q610	B2
Q630	A4
R101	Q2
R102	L1
R103	L1
R105	L2
R107	M2
R109	L2
R112	Q2
R132	O3
R134	Q2
R136	N3
R138	H3
R142	G3
R143	G3
R147	K3
R148	J3
R150	H2
R151	G3
R152	G2
R153	H2
R155	G2
R157	H3
R158	I2
R159	I2
R161	J2
R163	I2
R164	J2
R166	G2
R168	G3
R169	H2
R170	H1
R172	G2
R173	H1
R176	H1
R178	H1
R179	I1
R181	I2
R182	J1
R183	I1
R185	H1
R187	G1
R189	G1
R190	F2
R195	E4
R197	F2
R199	F1
R200	E2
R201	E2
R202	F1
R206	F1
R205	E1
R210	E2
R212	E3
R215	E3
R220	K2
R222	F2
R227	E2
R230	E4
R232	E3
R235	E4
R240	D4
R242	D4
R243	D4
R245	D4
R247	C4
R260	F2
R262	F3
R263	F3
R265	G3
R267	F2
R270	D5
R272	D6
R274	D6
R276	D5
R278	C6
R280	B5
R281	B5
R284	C4
R285	B5
R290	C5
R292	C5
R296	C6
R301	Q5
R302	L5
R303	L4
R305	M4
R307	L3
R309	L4
R312	Q5
R332	Q5
R334	Q6
R336	N5
R338	H5
R340	H4
R342	G4
R343	G4
R347	J4
R348	J4
R350	G4
R351	G4
R352	H5
R353	H5
R355	H5
R357	G4
R358	I4
R359	I4
R361	J4
R363	I5
R364	J5
R366	H5
R368	G5
R369	H5
R370	H6
R372	H6
R373	G4
R376	I6
R378	I6
R379	I6
R381	I5
R382	J6
R383	I6
R385	H6
R387	H6
R389	G5
R390	F6
R392	E5
R395	D4
R397	F5
R399	F6
R400	F4
R401	G5
R402	F5
R405	E5
R406	F5
R410	F6
R412	E5
R420	K5
R422	D5
R427	E5
R432	D5
R460	F5
R462	F4
R463	G4
R465	E4
R467	F5
R480	C3
R481	C3
R485	C4
R487	D2
R490	C2
R491	D2
R493	A5
R495	A6
R499	A6
R610	A2
R612	A3
R614	B2
R616	B2
R618	B3
R620	B2
R622	B2
R623	A1
R625	A1
R627	B3
R630	A4
R632	A3
R634	B4
R636	B3
R638	B3
R640	B4
R642	B4
R643	A3
R645	A2
R647	B3
R650	B3
R652	B3
R653	C3
R656	C2
R658	A2
R660	B2
R662	B1
R670	C2
RT178	I1
RT378	I5
S100A	Q2
S100B	Q2
S270A	F4
S270B	F4
S300A	Q5
S300B	Q5
S390	E6
S480A	D2
S480B	D3
S480C	D3
S495	D1