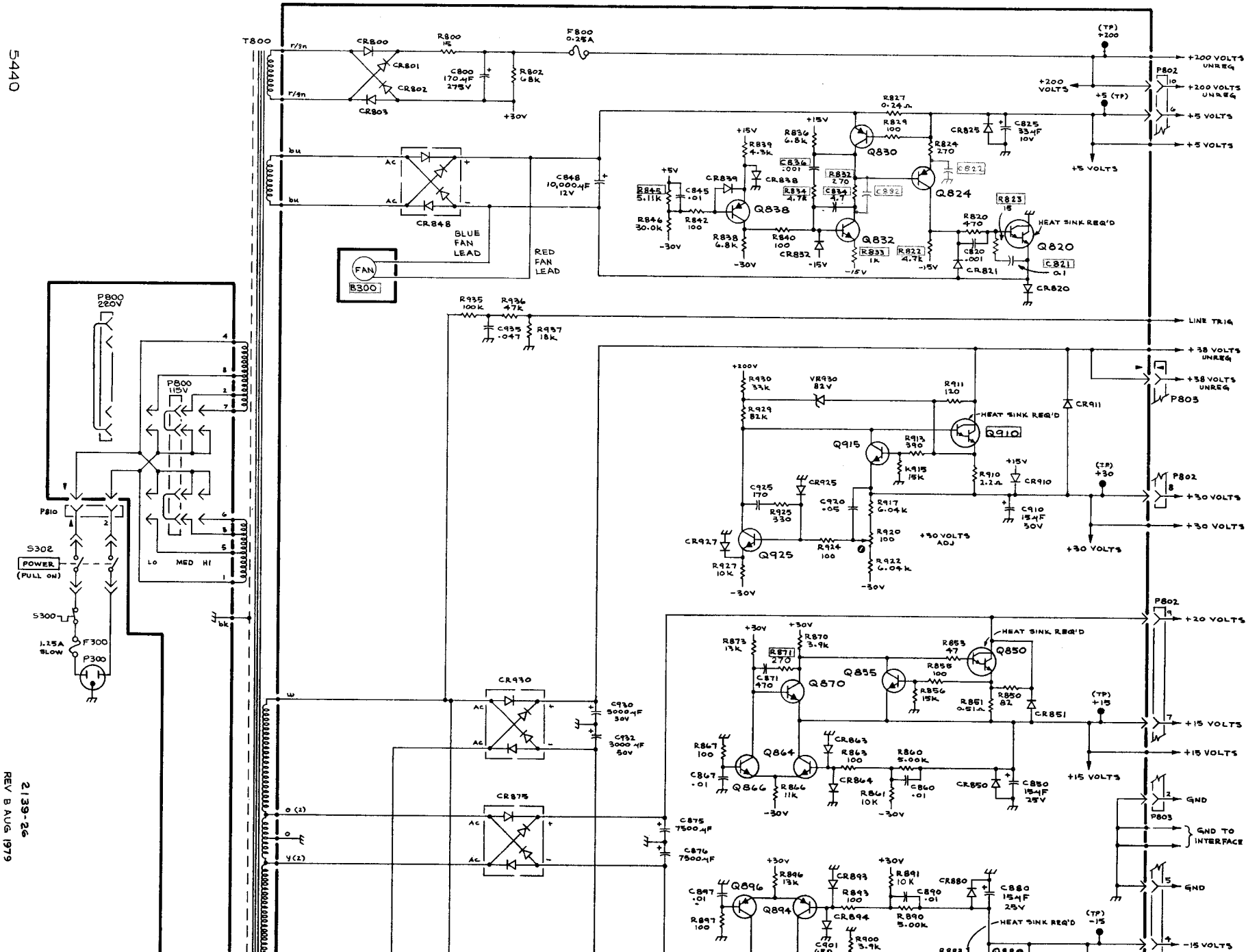
T800
CR800
CR801
CR802
CR803
R800 15
C800 170µF 275V
R802 68K
F800 0.25A
+30V
+200 VOLTS UNREG
+200 VOLTS UNREG
+5 VOLTS
+5 VOLTS
+200 VOLTS
+5 (TP)
+5 VOLTS
P802
CR848
C848 10,000µF 12V
BLUE FAN LEAD
RED FAN LEAD
FAN
B300
Q830
Q824
Q838
Q832
Q820
HEAT SINK REQ'D
CR820
CR821
CR825
C825 33µF 10V
LINE TRIG
+38 VOLTS UNREG
+38 VOLTS UNREG
P803
Q910
Q915
Q925
CR910
CR911
C910 15µF 50V
+30 VOLTS
+30 VOLTS
+30 VOLTS ADJ
+30 VOLTS
+30 VOLTS
P802
P800 220V
P800 115V
P810
S302
POWER (PULL ON)
S300
1.25A SLOW
F300
P300
LO MED HI
CR930
CR875
C930 5000µF 50V
C932 3000µF 50V
C875 7500µF
C876 7500µF
Q850
Q855
Q870
Q864
Q866
Q896
Q894
+20 VOLTS
+15 VOLTS
+15 VOLTS
+15 VOLTS
+15 VOLTS
GND
GND TO INTERFACE
GND
-15 VOLTS
CR850
C850 15µF 25V
C880 15µF 25V
CR851
CR880
CR894
CR893
CR863
CR864
CR894
CR893